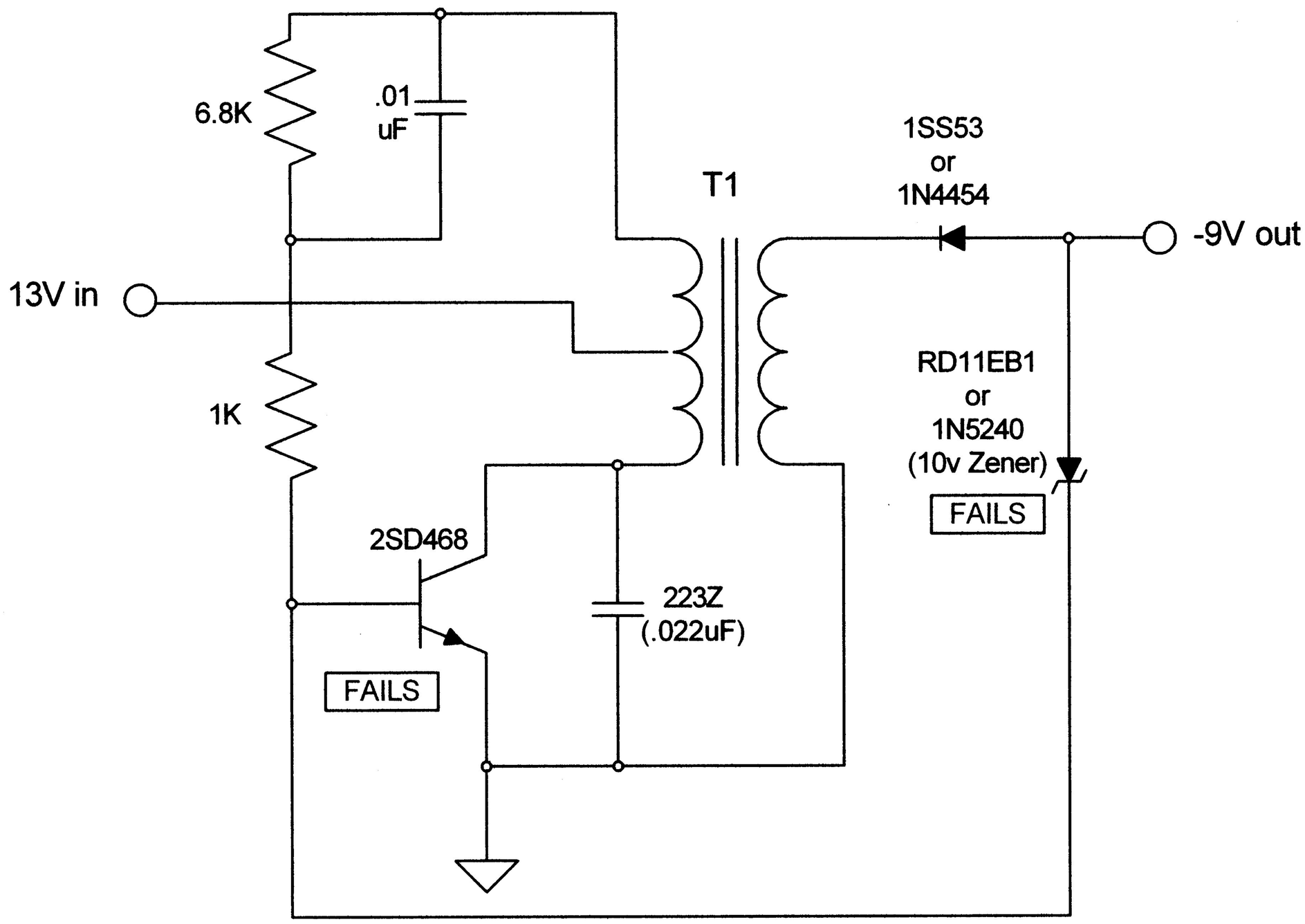

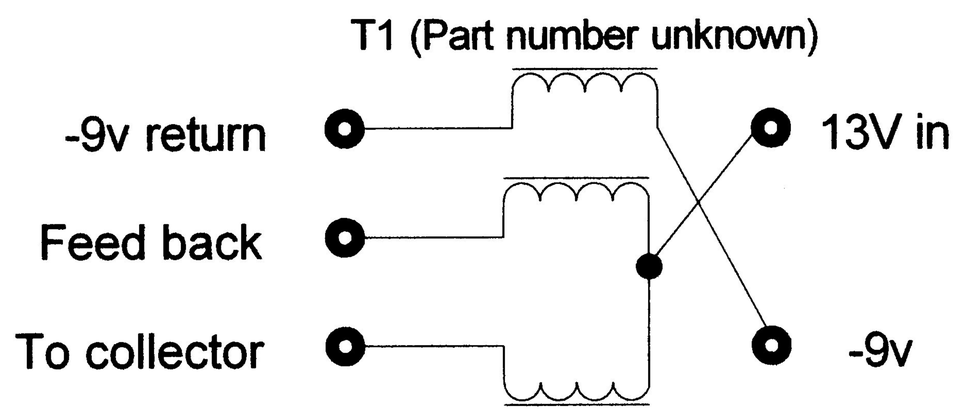

	WILLCO ELECTRONICS			
	ICOM DP-2, -9 VOLT DC TO DC CONVERTER Used on IC-271,471, R71 (IC2)			
	SIZE	FSCM NO	DWG NO	REV B
9/14/2007	SCALE 1 : 1		SHEET 1 OF 1	